Packaging - Specification
Can / FOODCERT

SCANDRUMS
Part of Schütz Nordic AS

Jerrycan SC1 FoodCert 5l natural / 240 g
DN51 w/o screw cap,
tower stacking, 32pcs/layer, 10 layers/pal, 320 pcs/EURO-pal.
w/PE-cover

Schütz GmbH & Co. KGaA
Schützstrasse 12
56242 SELTERS / WESTERWALD
GERMANY

Article-No. **4055966**

Date Aug 11, 2025

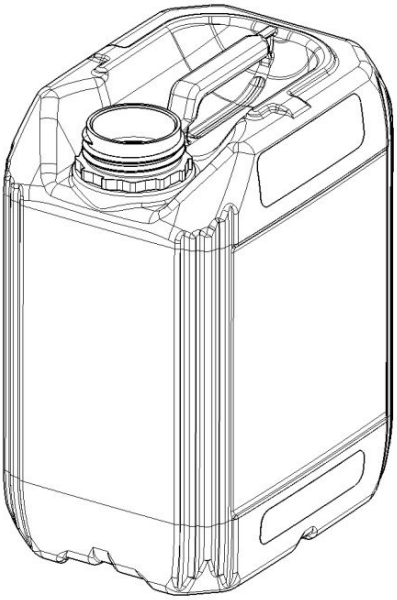

This picture is for illustration purpose only and does not necessarily correspond to the specified product.

CAN	
Material	PE-HD
Color	natural
UN-Marking	

WEIGHTS AND MEASURES	
Height	255
Length	190
Width	145 mm
Nominal Capacity	5 Liter
Brimful Capacity	5,4 Liter
Weight body approx	240
Labeling area	150 mm x 145 mm

CLOSURE SYSTEM		
Screwcap	DN51	
Type	without screwcap	

Loading

-euro pallet
-PE-Cover

Heavy metals

Concentration level of heavy metals (Pb, Cd, Cr VI and Hg) in packaging does not exceed 100 ppm

Delivery

Ready for filling. The customer or filler is responsible for testing the material compatibility of the filling material with the packaging

This specification is manufactured and delivered in accordance with the current status of the SCHÜTZ "Quality Management Standard for Supplies of Packaging Materials", which you can view at the following link:
www.schuetz.net/qmstandard

User information:

Jerrycan SC1 FoodCert 5l natural / 240 g
DN51 w/o screw cap,
tower stacking, 32pcs/layer, 10 layers/pal, 320 pcs/EURO-pal.
w/PE-cover

Schütz GmbH & Co. KGaA
Schützstrasse 12
56242 SELTERS / WESTERWALD
GERMANY

Article-No. **4055966**

Date Aug 11, 2025

With the implementation and continuous improvement of comprehensive preventive programmes, SCHÜTZ strives to minimize the potential risk of contamination for the filling material in accordance with the current state of the art and in accordance with established and applicable quality and system standards.
In industrial production, however, contamination can never be entirely ruled out. Specifically for plastic and steel packaging, unavoidable friction caused during opening and closing as well as static charging of the packaging material can contribute to the formation of particles or attract particles. As a result, particles may also inadvertently get inside the packaging.
In order to minimize the risk of particle formation and particle ingress, users are recommended to keep the packaging closed and limit opening and closing the container to a minimum, particularly during further processing steps.
Especially in the case of sensitive products or product applications (such as food/pharmaceutical products, lacquers or electrochemicals), it is recommended that the product is filtered during discharge or before further processing.

Schütz GmbH & Co. KGaA
56242 Selters
Germany

In accordance with FSSC 22000, SCHÜTZ advises that the products are compliant and labelled as a food contact item in accordance with the applicable legal requirements of Regulations (EC) No. 1935/2004, (EC) No. 10/2011, Code of Federal Regulation Title 21 § 177.1520, 177.2600 and 178.3297 of the Food and Drug Administration. It is the CUSTOMER's responsibility to ensure compliance with all additional or variant local legal requirements and labelling obligations.

- Product certification based on the minimum requirements according to ISO 9001, GMP & PIM (EU)
- System certification according to FSSC 22000: ISO 22000:2005 & ISO/TS2 2002-4
- Halal & Kosher certification
- We take an integrated approach to processes during delivery, production, production environment, storage and transport.

If you have any further questions regarding materials, products or processes, as well as their measures and risk prevention programmes, our Technical Customer Service will be happy to provide you with further information material about FSSC 22000 certification.

+
- Additional sealing of clamping rings*
- Other accessories individually packaged and specially stored*
- Protective cover for transport*
- Customer-specific labelling of packaging*
- Customer-specific delivery specifications*
- Direct loading*

*optional

PLEASE NOTE:
The above statements are based on our current knowledge and experience. It does not exempt the user of our packaging from carrying out his own tests. No legally binding assurance can be derived from our information. It is

the responsibility of the customer to comply with all applicable laws and regulations.
We would like to point out that in particular the legal transport obligations according to the Orange Book / IMDG / ADR / RID must be observed (Chapter 4.1.3.1 and also 49 CFR §173.24 (e) in the USA). It is therefore the responsibility of the filler or distributor to test the material compatibility of the filling product with the packaging and to evaluate the general suitability for the respective intended use.
Please note that for applications in EX-zones, the applicable contents of IEC TS 60079-32-1 and TRGS 727 must be observed, irrespective of the information given in the Material Safety Data Sheet (MSDS).